ATTACHMENT 6

FACILITY DRAWINGS

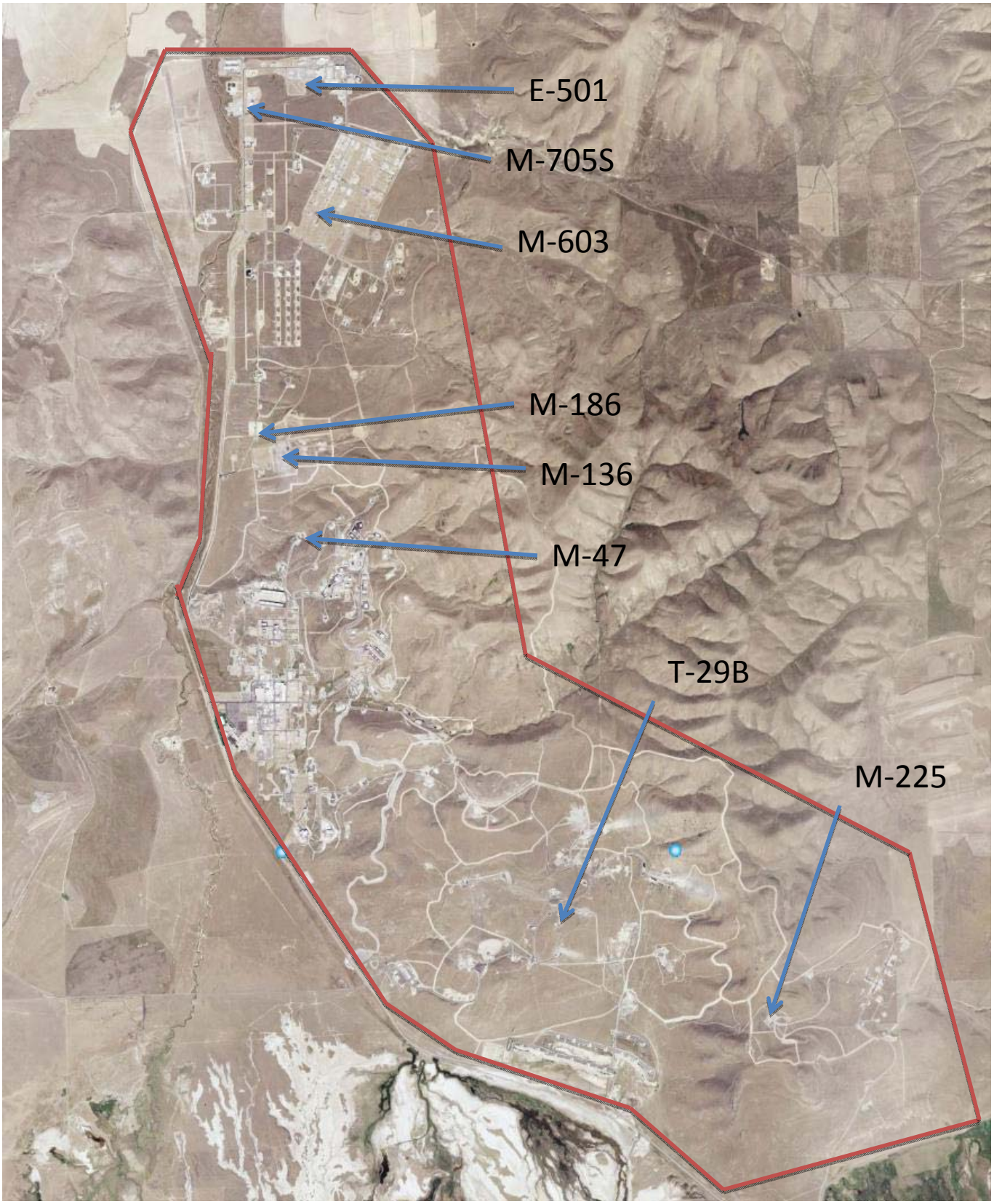

ATK Promontory Facility – Figure 6A

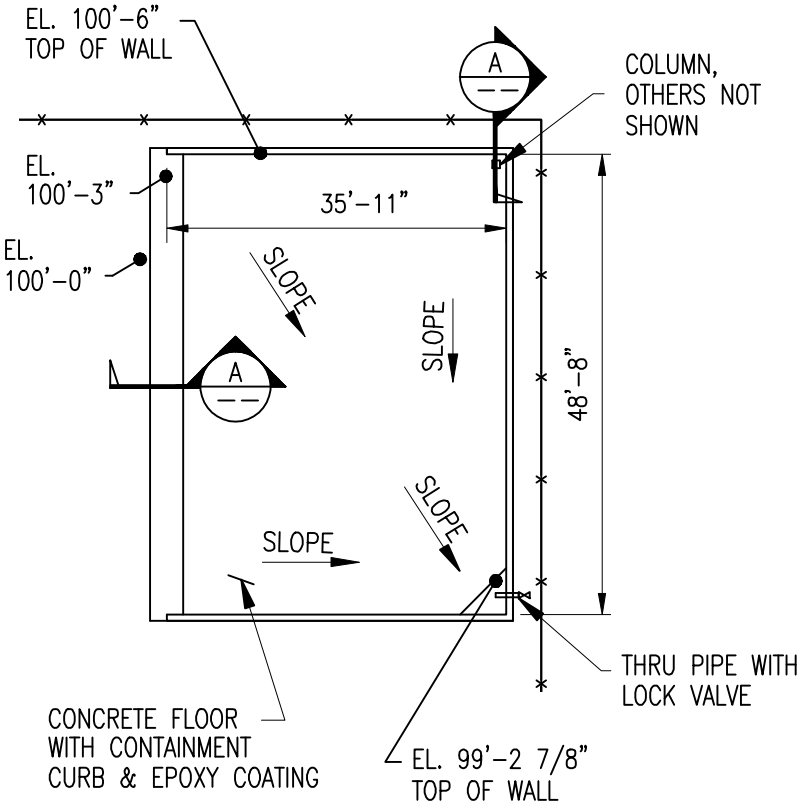

E-501 PLAN VIEW

SCALE: 1" = 20'-0"±

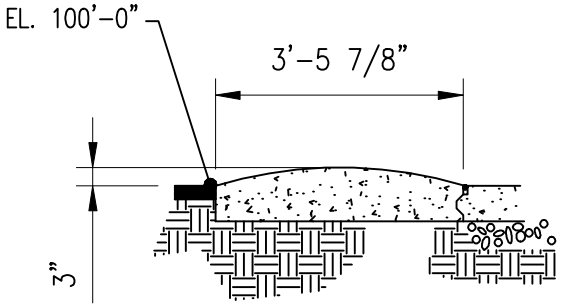

SECTION A

SCALE: 3/8" = 1'-0"

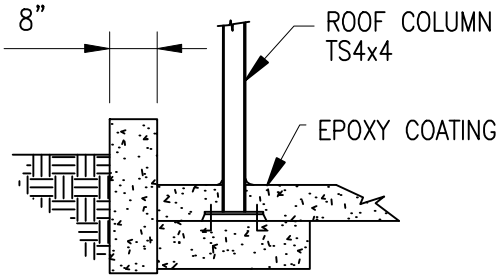

SECTION B

SCALE: 3/8"" = 1'-0"

E-501 PAD LAYOUT

FIGURE B-1

N

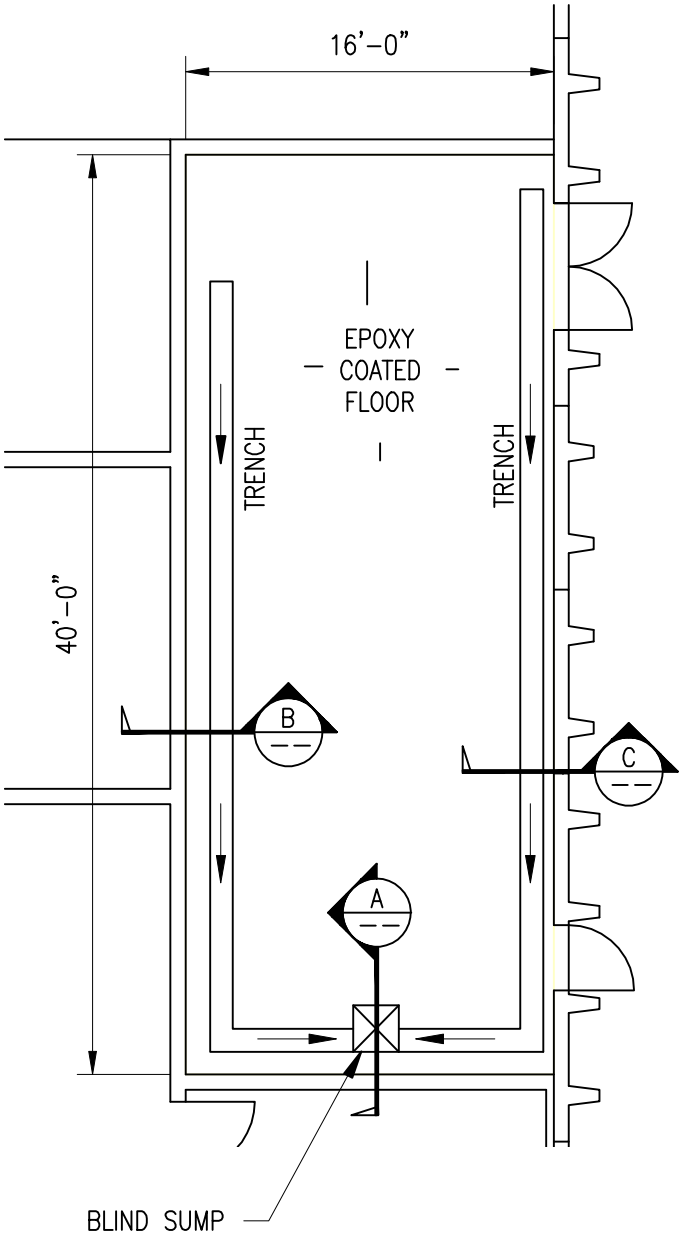

M-705S PLAN VIEW

SCALE: 1/8" = 1'-0"

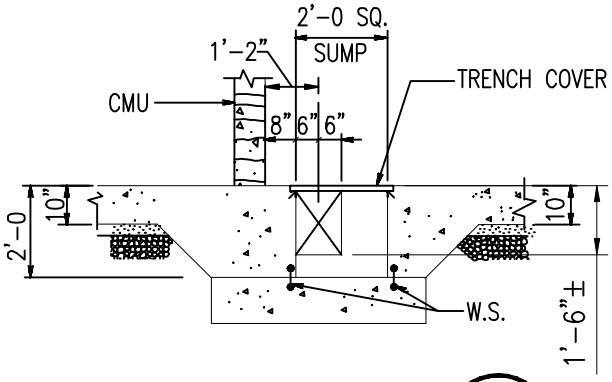

SECTION A

SCALE: 1/4" = 1'-0"

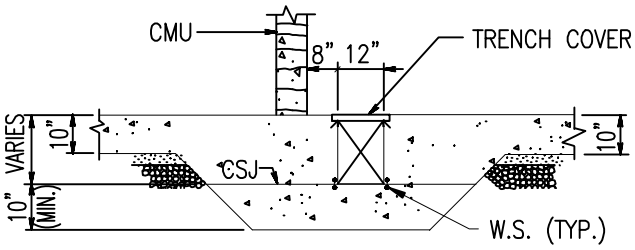

SECTION B

SCALE: 1/4" = 1'-0"

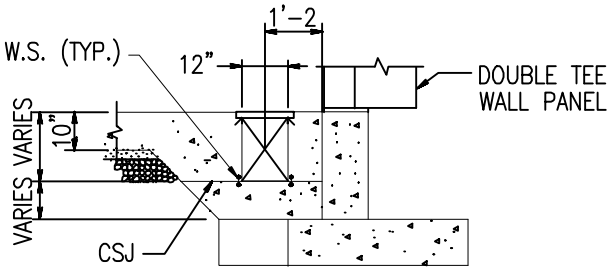

SECTION C

SCALE: 1/4" = 1'-0"

M-705S BUILDING LAYOUT

FIGURE C-1

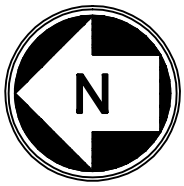

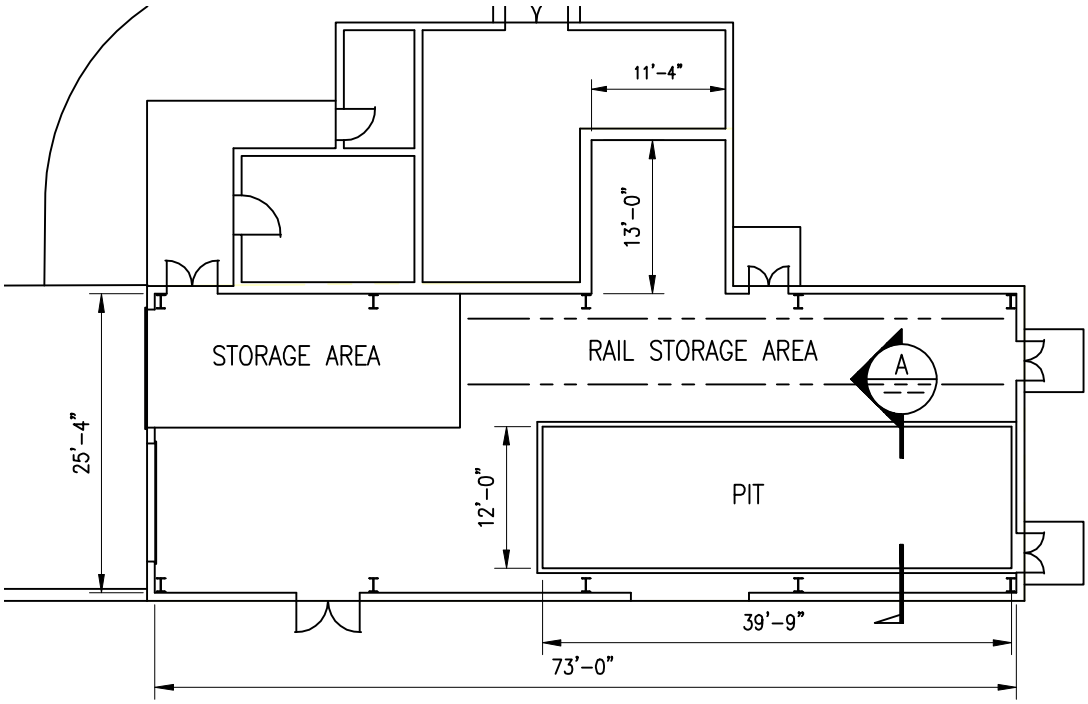

M-603 PLAN VIEW

SCALE: 1/16" = 1'-0"±

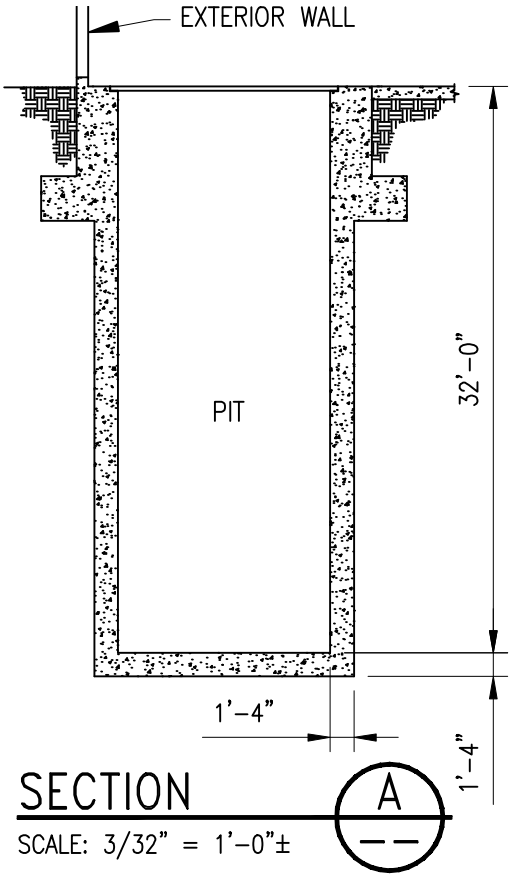

SECTION

SCALE: 3/32" = 1'-0"±

M-603 BUILDING LAYOUT

FIGURE D-1

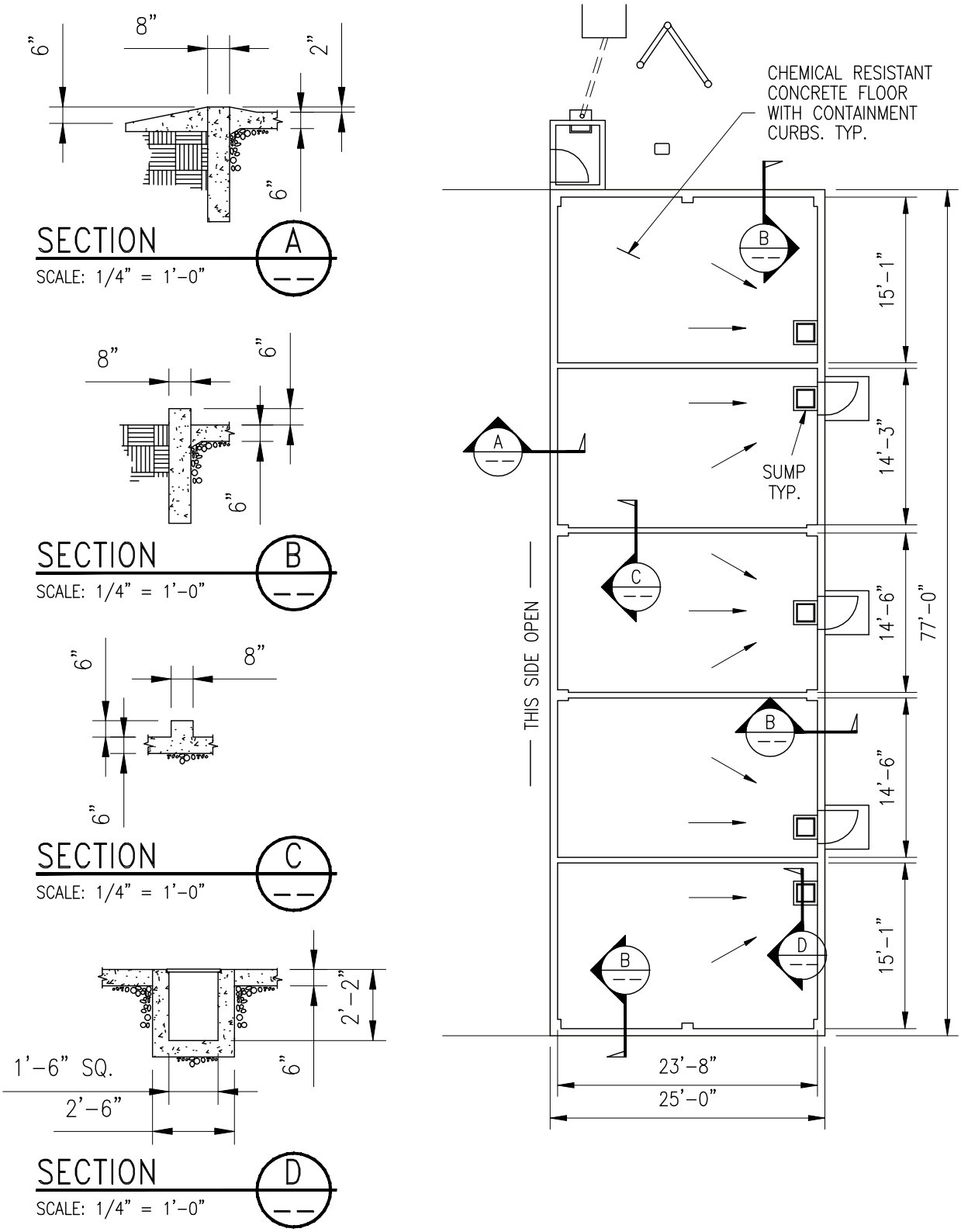

M-186 BUILDING LAYOUT

FIGURE E-1

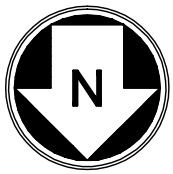

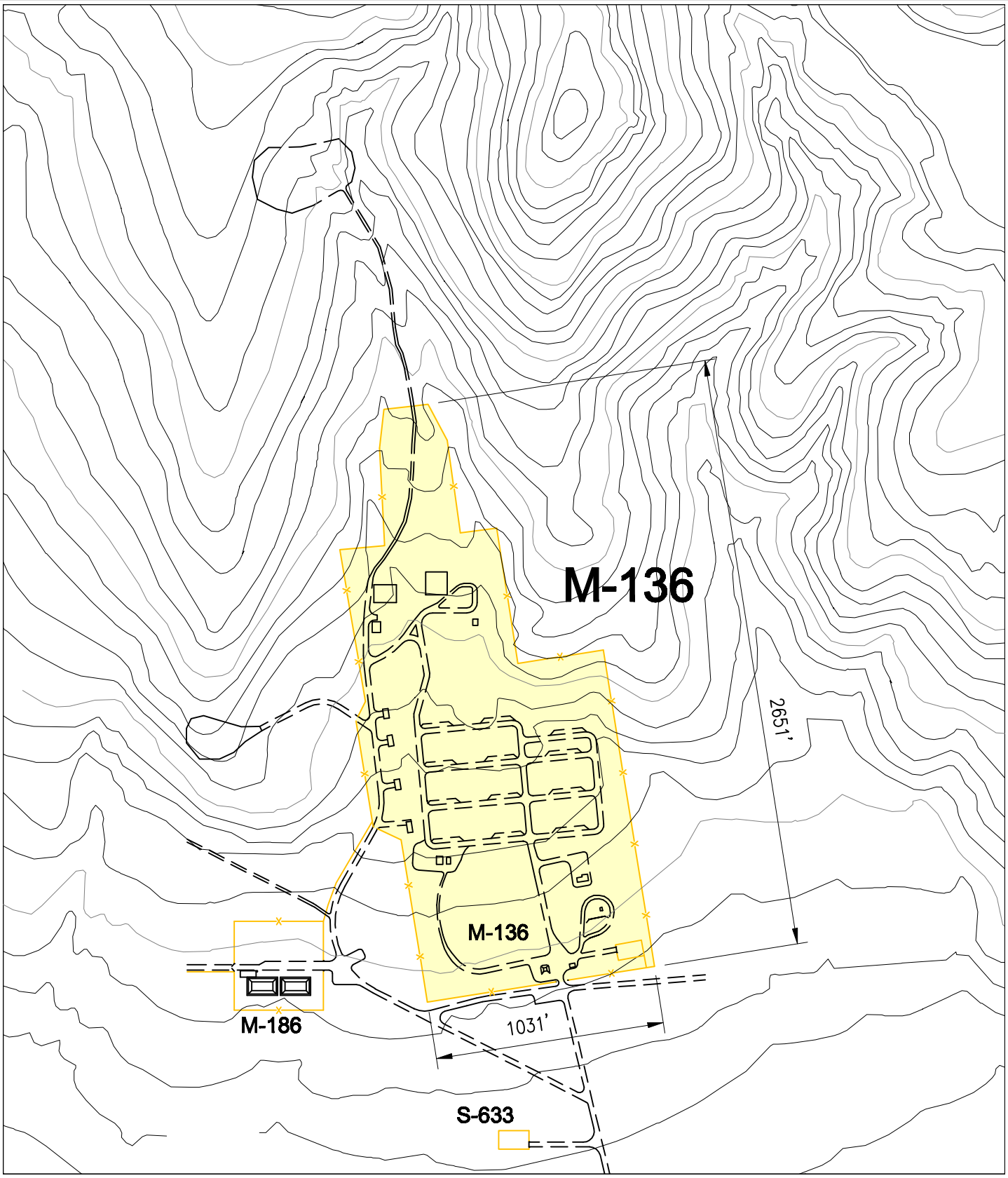

M-136 BURN GROUND FACILITY LAYOUT FIGURE F-1

N

SCALE: 1" = 600' - 0"±

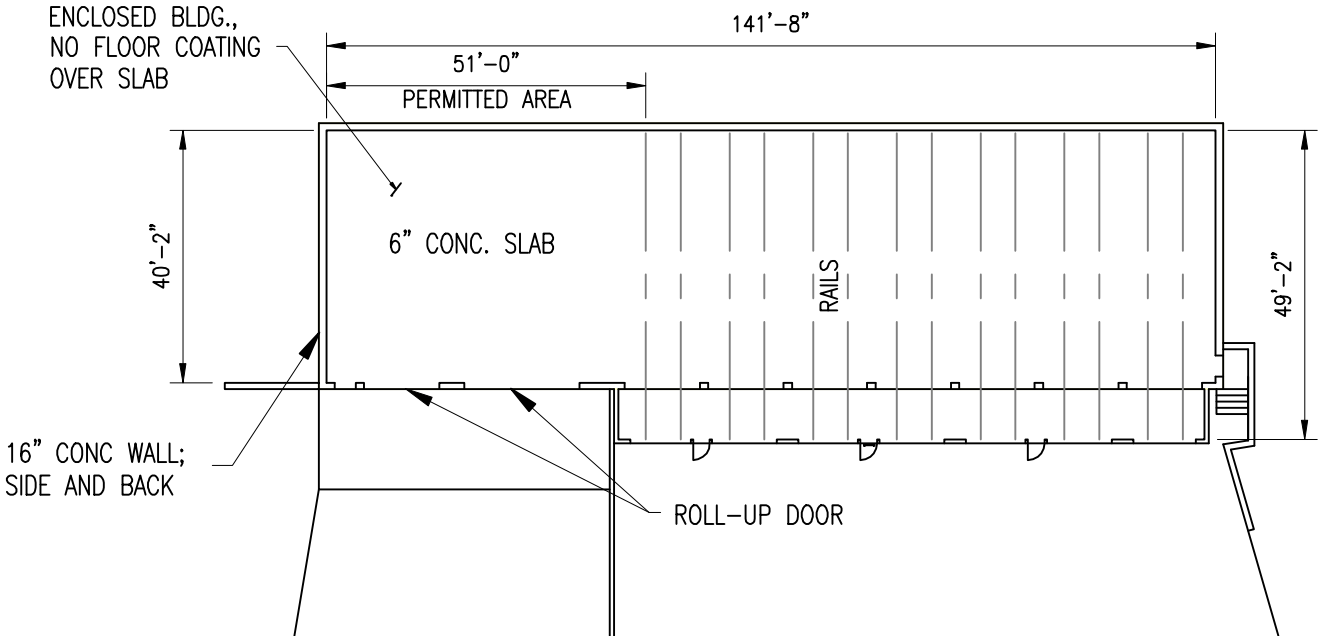

M-47 PLAN VIEW

SCALE: 1" = 30'-0"±

M-47 BUILDING LAYOUT

FIGURE G-1

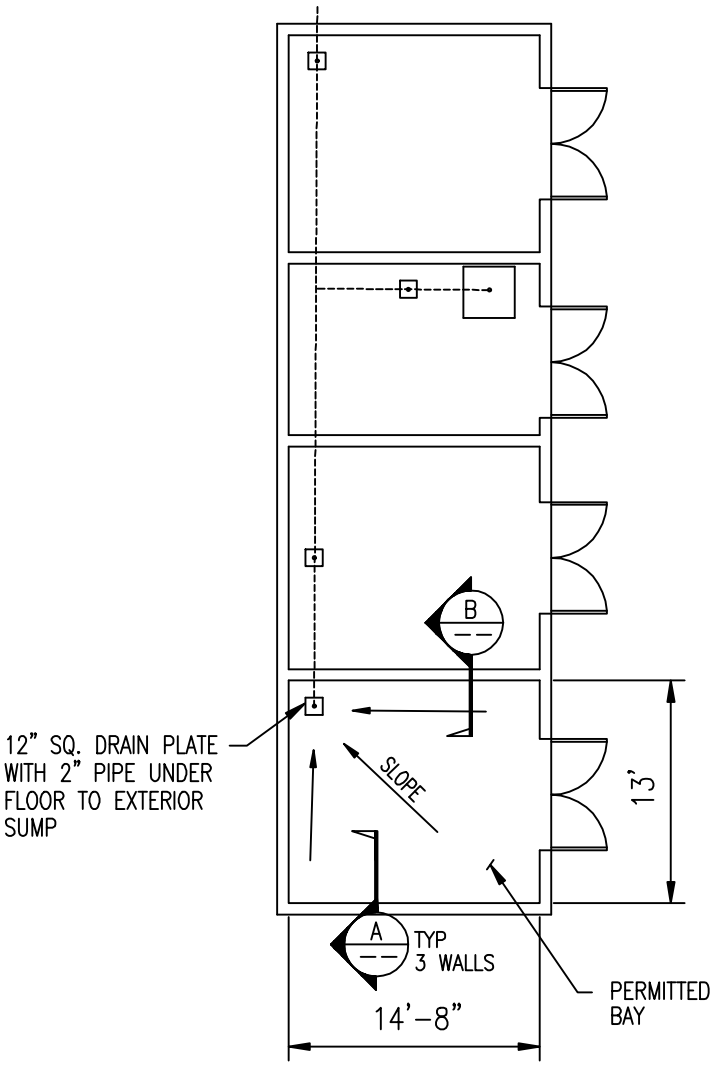

T-29B PLAN VIEW

SCALE: 1" = 10'-0"

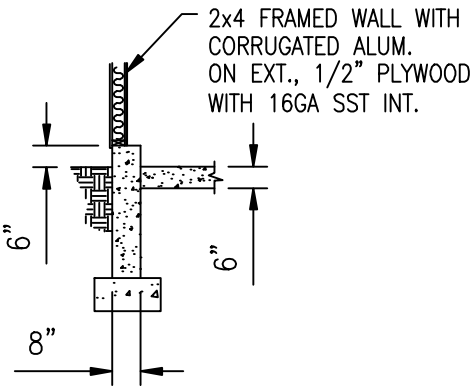

SECTION A

SCALE: 1/4" = 1'-0"

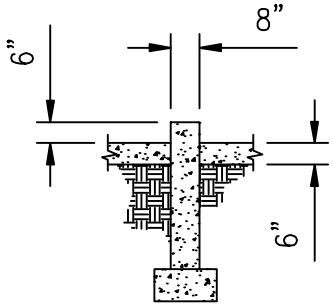

SECTION B

SCALE: 1/4" = 1'-0"

T-29B BUILDING LAYOUT

FIGURE H-1

N

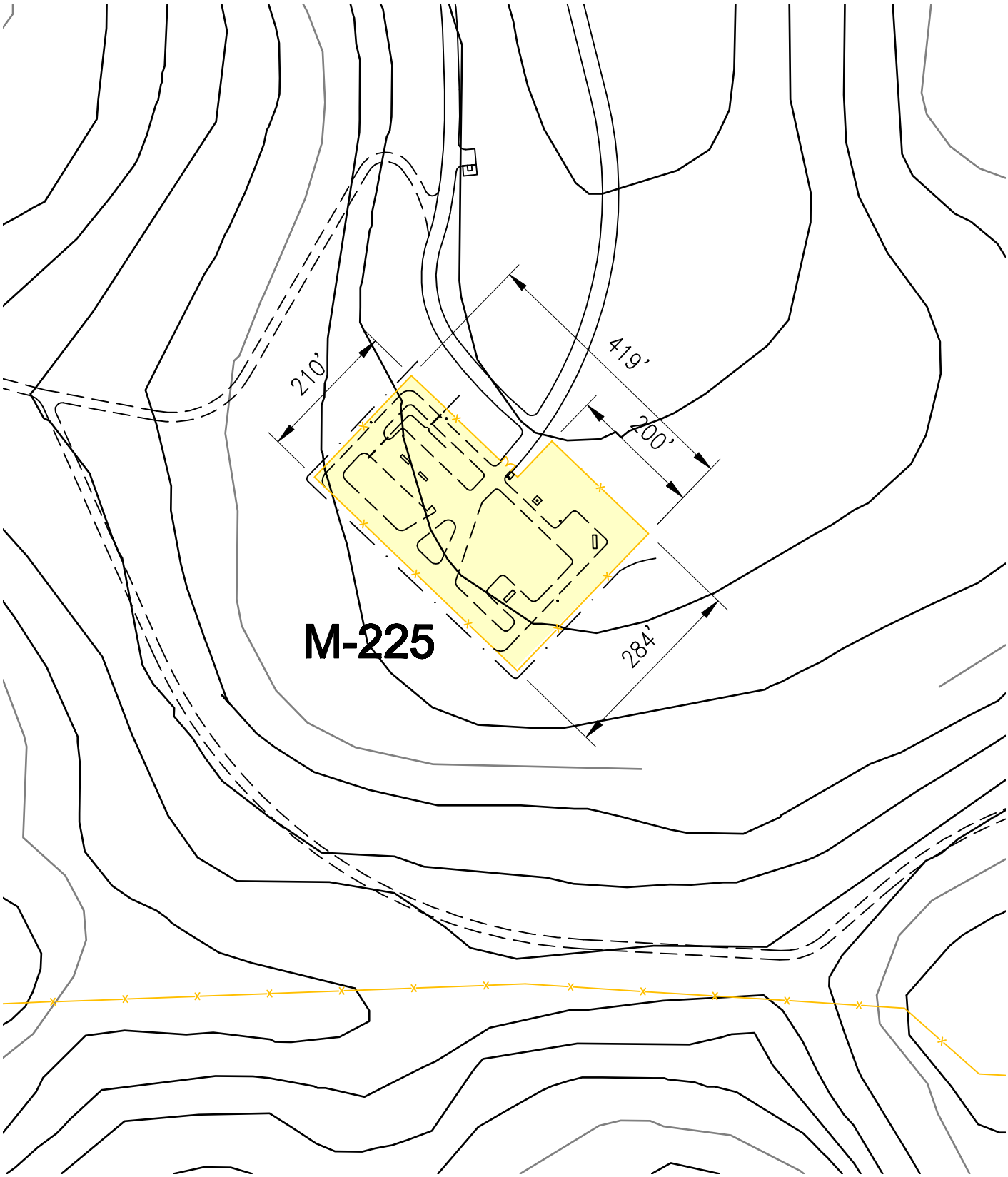

M-225 BURN GROUND FACILITY LAYOUT FIGURE I-1

N

SCALE: 1" = 200' - 0"±